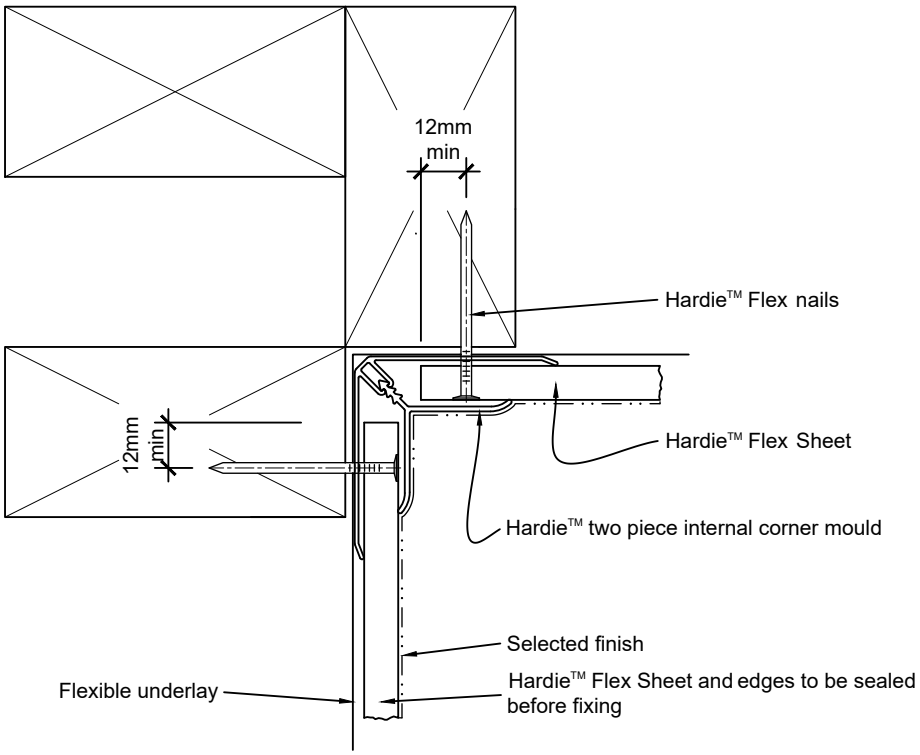

Note:
1. Refer Table 20 of NZBC E2/AS1 document when 50 year durability is required.